Lochinvar®
HIGH EFFICIENCY BOILERS & WATER HEATERS

PARTS & SERVICE DEPARTMENT
Nashville, Tennessee
615-889-8900 • Fax: 615-882-2918
parts_team@lochinvar.com
www.Lochinvar.com

Replacement Parts List

Power-Vented Residential Gas
Models LVN(L) 076

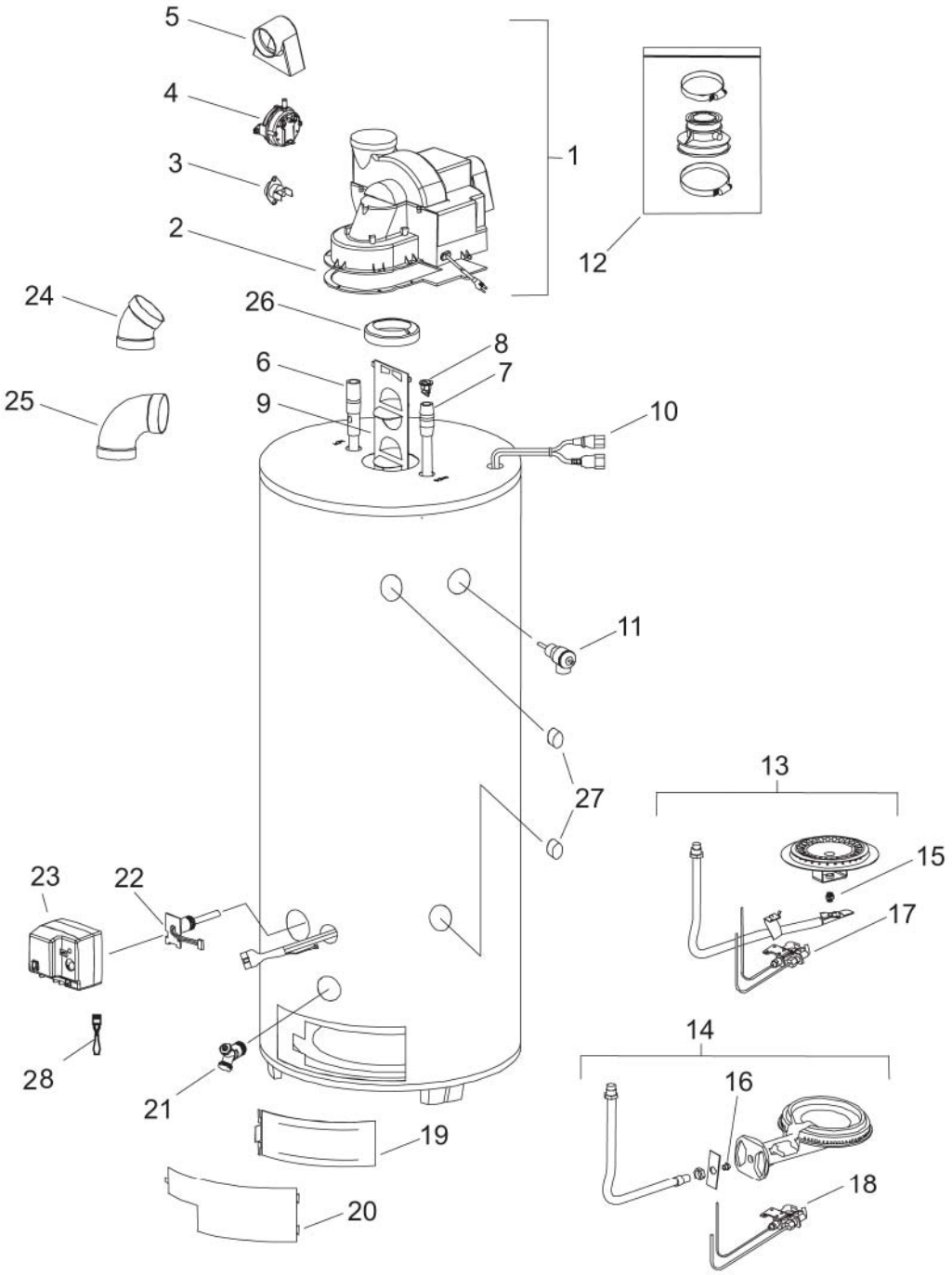

ITEM NO.	DESCRIPTION		MODEL NUMBERS / PART NUMBERS		
				LV(N,L)076	
1	BLOWER			100166721	
2	BLOWER GASKET			100146305	
3	HI LIMIT			100148359	
4	PRESSURE SWITCH			100166088	
5	AIR MIXING INLET			100162447	
6	ANODE, MAGNESIUM			100173530	
7	DIP TUBE			100173537	
8	HEAT TRAP INLET			100173547	
9	FLUE BAFFLE			100155915	
10	SAFETY CIRCUIT WIRE HARNESS			100172716	
11	T&P RELIEF VALVE			100167347	
12	EXHAUST ADAPTOR			100141593	
13	BURNER ASSEMBLY, NAT.			100135174	
14	BURNER ASSEMBLY, LP			100135175	
15	ORIFICE, NAT.			100163925	
16	ORIFICE, LP			100164006	
17	PILOT ASSEMBLY, NAT.			100165836	
18	PILOT ASSEMBLY, LP			100165837	
19	INNER DOOR			100155865	
20	OUTER DOOR			100155816	
21	DRAIN VALVE			100141586	
22	GAS VALVE, NAT. - WITH SENSOR			100273590	
22	GAS VALVE, LP - WITH SENSOR			100273631	
23	GAS VALVE, NAT. - WITHOUT SENSOR			100170430	
23	GAS VALVE, LP - WITHOUT SENSOR			100170431	
25	EXHAUST TERMINATION ELBOW			100141399	
26	FLUE REDUCER			100141368	
27	3/4” NPT PLUG			100162458	
28	SIMULATED RESISTIVE DEVICE			100172750	

PLEASE HAVE MODEL NUMBER AND SERIAL NUMBER WHEN ORDERING PARTS.

©-07/16-Printed in U.S.A.